DRIVE TRAIN, FRONT GEARCASE - Z26SPD92AN/AH/BN/BH (702700)

2026 RZR - RZR PRO S ULTIMATE (R01) - Z26SPD92AN/AH/BN/BH

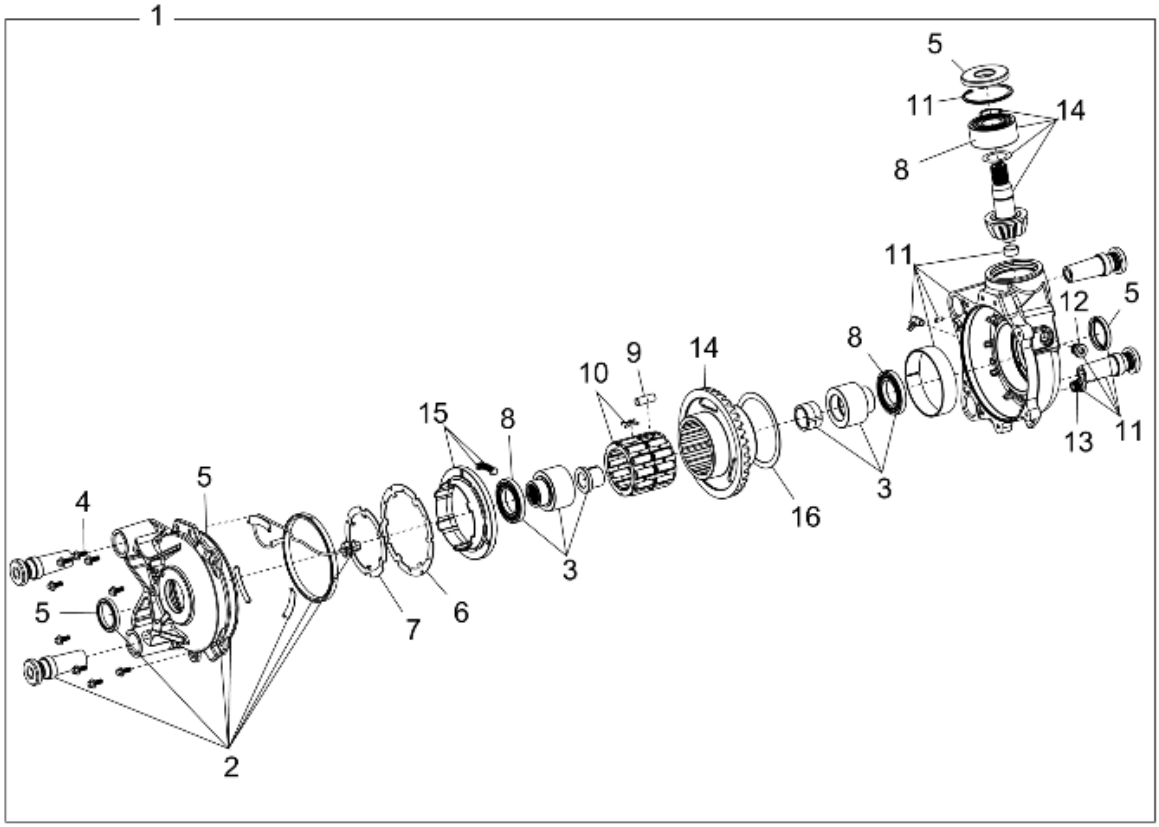

© 2019 Polaris Industries Inc.

702700

Reference #	Part#	Description	Quantity
	5417371	KIT, ISOLATION NS	1
1	1337227	ASM-GEARCASE,FRONT,ISOL [INCL. ALL]	1
1	1337202	ASM-GEARCASE,FRONT,ISOL HD [RACE/HD OPTION]	1
2	3239499	ASM. COVER OUTPUT	1

3	3239500	ASM. OUTPUT HUB	1
4	3236202	COVER, FASTENERS	1
5	3239501	KIT, SEAL REPAIR	1
6	3236488	PLATE, 4WD ARMATURE	1
7	3236205	PLATE, CAGE	1
8	3236206	BEARINGS	1
9	3236207	CAGE ROLLERS	1
10	3236208	ASM, ROLL CAGE	1
10	3239336	ASM-ROLL CAGE [RACE/HD OPTION]	1
11	3236687	ASM-GEARCASE	1
12	2203739	KIT-PLUG,FILL	1
13	2203738	KIT-PLUG,DRAIN	1
14	3236626	ASM. GEAR HOUSING & PINION GEAR	1
15	3239527	TORSION RETAINER ASSEMBLY	1
16	3236212	SPACER, GEAR	1

Copyright 1996-2026 Polaris Industries U.S.A All rights reserved.